Europa

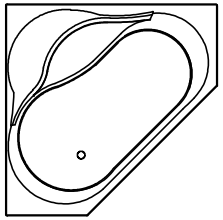

Scale 1:50

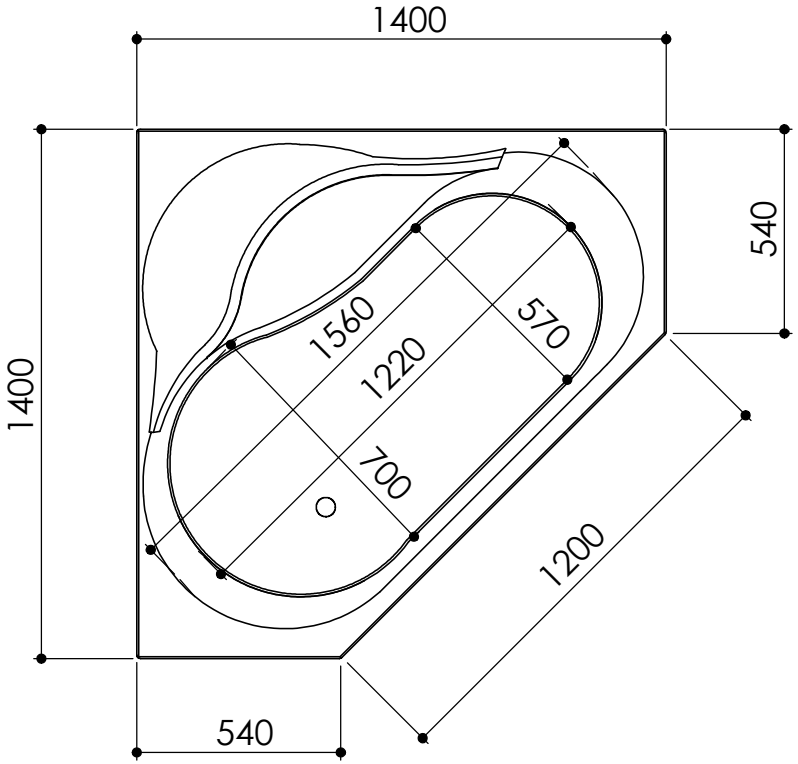

Scale 1:20