ADAMSEZ®

Duo with tap ledge (DUW)

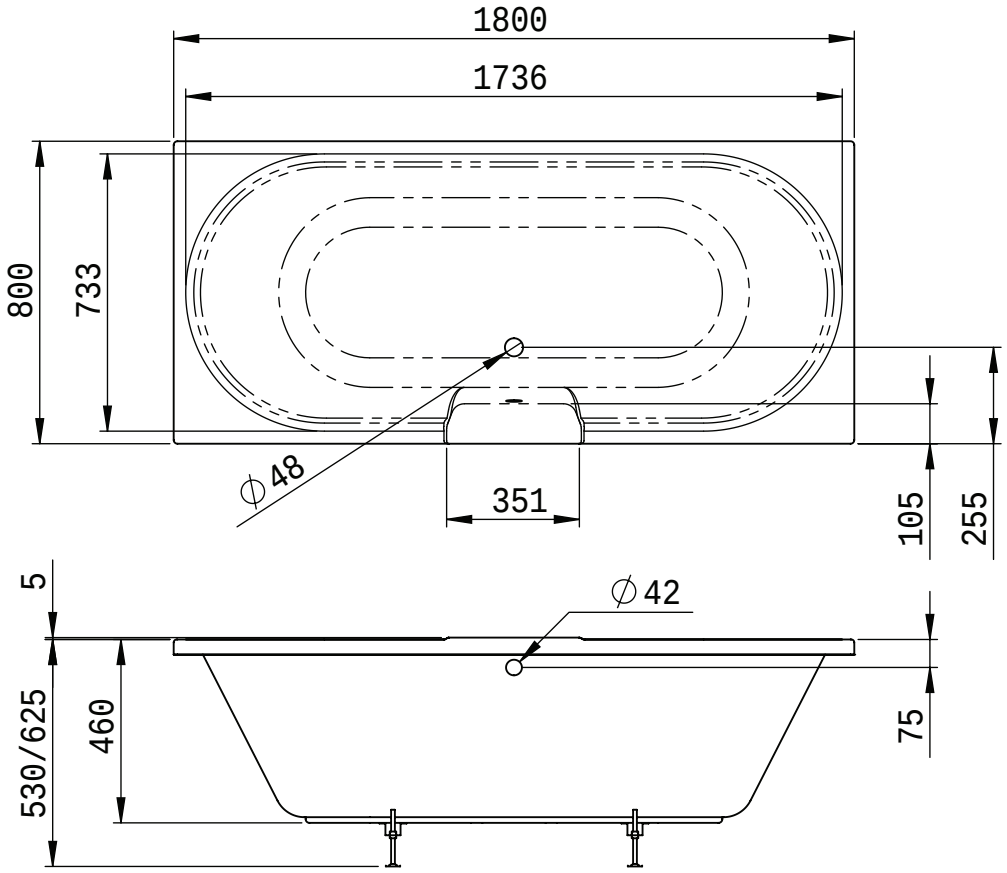

Volume 210L to base of overflow
Manufacturing Tolerance
<1m ±5mm
>1m +5mm -10mm
For further information please visit www.adamsez.com or contact us direct using the details below.

t: +44 (0) 28 9048 0465
f: +44 (0) 28 9048 0485
e: info@adamsez.com
w: www.adamsez.com

All dimension approximate

© 2008 Adamsez (NI) Limited

ADAMSEZ®

Duo without tap ledge (DUN)

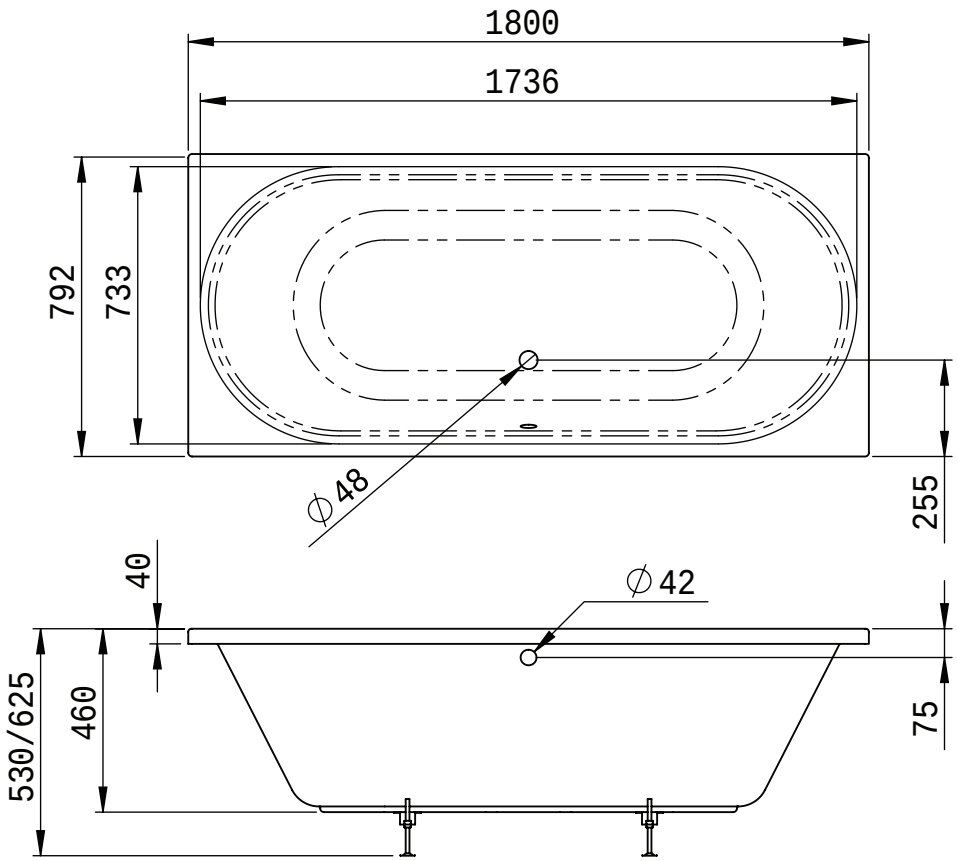

Volume 210L to base of overflow
Manufacturing Tolerance
<1m ±5mm
>1m +5mm -10mm
For further information please visit www.adamsez.com or contact us direct using the details below.

t: +44 (0) 28 9048 0465
f: +44 (0) 28 9048 0485
e: info@adamsez.com
w: www.adamsez.com

All dimension approximate
© 2008 Adamsez (NI) Limited