TECHNICAL DATA SHEET

Burlington®
Yesterday's designs TODAY'S TECHNOLOGY

Mahogany WC Unit

Product Specification

Finishes	Gloss mahogany
Product Type	Traditional
Material	Wood with veneer
Size	w50cm x d30cm x h81cm
Overall Height	81cm

Additional Information

Top access

Guarantee

10 YEAR GUARANTEE

See our website for terms and conditions

Compliance / Approvals
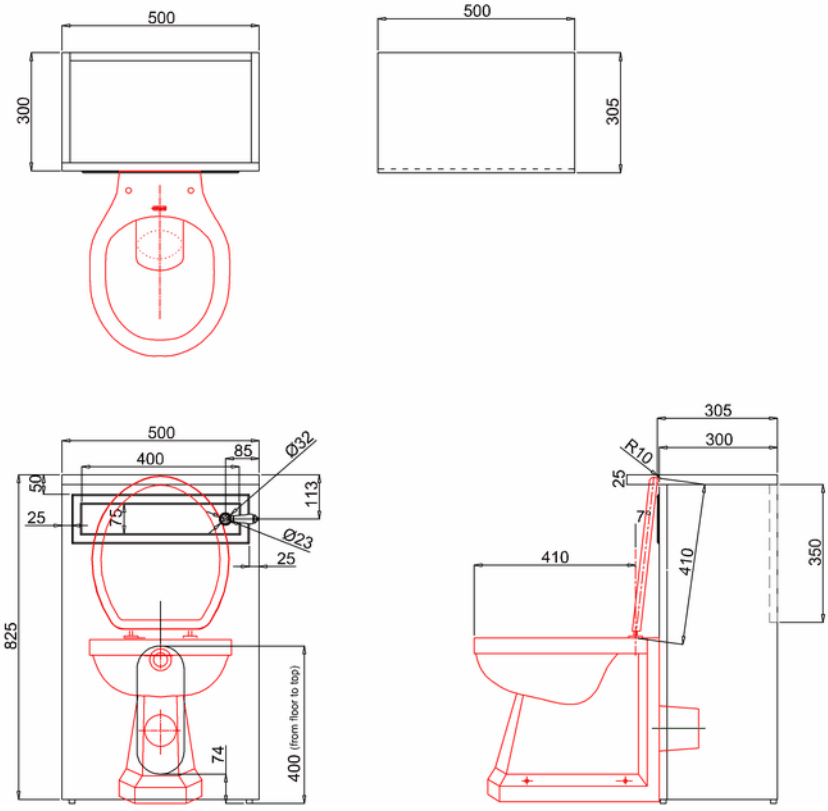
EN 14428:2004 (E)